bürkert
FLUID CONTROL SYSTEMS

Conductivity Sensor Cube

- Fully compatible with büS systems and a wide range of further analysis sensor cubes
- Resistive 2-electrode sensor
- Modular sensor cube for hot swap (exchange during operation)
- Minimal sample water flow needed

Type MS03 can be combined with...

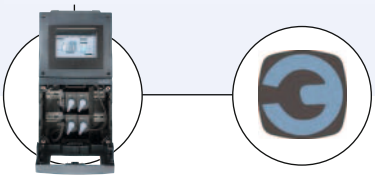

Type 8905
Online Analysis System

Communicator

The device is a conductivity measurement sensor. It is used within the Online Analysis System Type 8905 by being plugged into a spare fluidic backplane slot.

The conductivity of water follows in general the content of dissolved substances in the water. Not only the absolute value at each moment is an indicator for the continuity of the water quality, but quick changes in the conductivity may indicate unwanted change in the water. A rising or falling value can also be used as an indicator for process feedback in specific treatment steps.
The device contains a 2-electrode sensor for resistive measurement of conductivity.

The electrical and fluidic connections are made via the connection panel of the system. The sensor cube is communicating via büS, so the recognition at the Online Analysis System is fully automatic. When plugging into a system you will find the sensor in the list of büS members for further customized adjustments.

General data	
Compatibility	with Online Analysis System Type 8905 (see corresponding data sheet)
Materials Housing / Lever / Seal	 PPE+PS / PC / EPDM
Electrical connection	Plugging/unplugging into backplane of the Type 8905
Fluidic connection	Plugging/unplugging into backplane of the Type 8905
Conductivity sensor	graphite 2-electrode system, C = 1
Temperature sensor	Pt1000 Class B, contact with the water sample
Conductivity measurement Measuring range Measurement deviation[2)] Linearity Repeatability Response time (t90)	 50 µS/cm...1000 µS/cm [1)] ±2% of measured value ±0.2% of full scale ±0.2% of full scale < 5 s
Temperature measurement	0...+50°C *(+32 ...+122°F)*
Maintenance	12 months nominal, depending on the water quality
Type of medium pH value	Water without particles: drinking water, industrial water pH 4...pH 9
Sample water temperature	+3...+40°C *(+37...+104°F)*
Sample water pressure	PN3
Sample water flow range	> 6 l/h
Measurement compensation	Temperature compensated

[1)] Measurement up to 10 mS/cm possible at limited measurement deviation
[2)] = "measurement bias" as defined in the standard JCGM 200:2012

Environment	
Ambient temperature Operating Storage (only never used sensor cube)	 0...+40°C *(+32...+104°F)* -10...+60°C *(+14...+140°F)*
Relative humidity	< 90%, without condensation
Height above sea level	max. 2000 m

DTS 1000220809 EN Version: H Status: RL (released | freigegeben | validé) printed: 22.09.2017

Electrical data	
Operating voltage	24 V DC through the backplane of the system Type 8095 via büS
Power consumption	0.8 VA
Internal communication	through büS (Bürkert bus)
External communication by status LED	According to NAMUR NE 107

Standards, directives and certifications	
Protection class acc. to EN 60529	IP65, when plugged in the fluidic backplane IP20, as standalone product
Standard and directives CE	The applied standards, which verify conformity with the EU Directives, can be found on the EU Type Examination Certificate and/or the EU Declaration of conformity (if applicable)
Certification UL-Recognized for US and Canada	pending

Design and principle of operation

The sensor cube gets the sample water through the fluidic backplane, in which it is plugged in. The measurement is an graphite 2-electrode system.

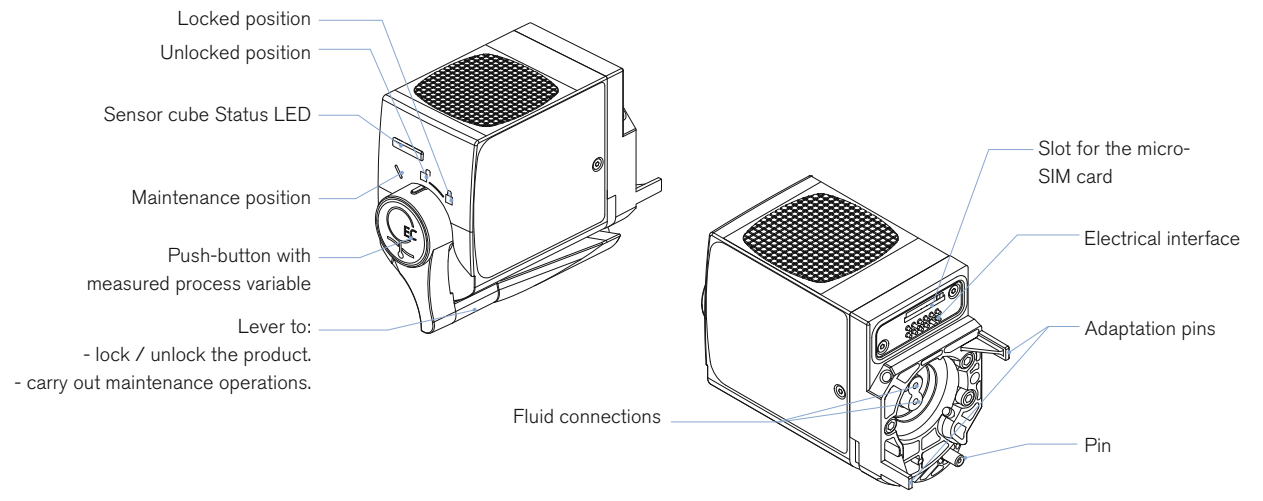

Installation into the Online Analysis System Type 8905

To operate a conductivity sensor cube it is necessary that a spare fluidic backplane is available. It can be installed in a compact system Type 8905 or in a customized version.

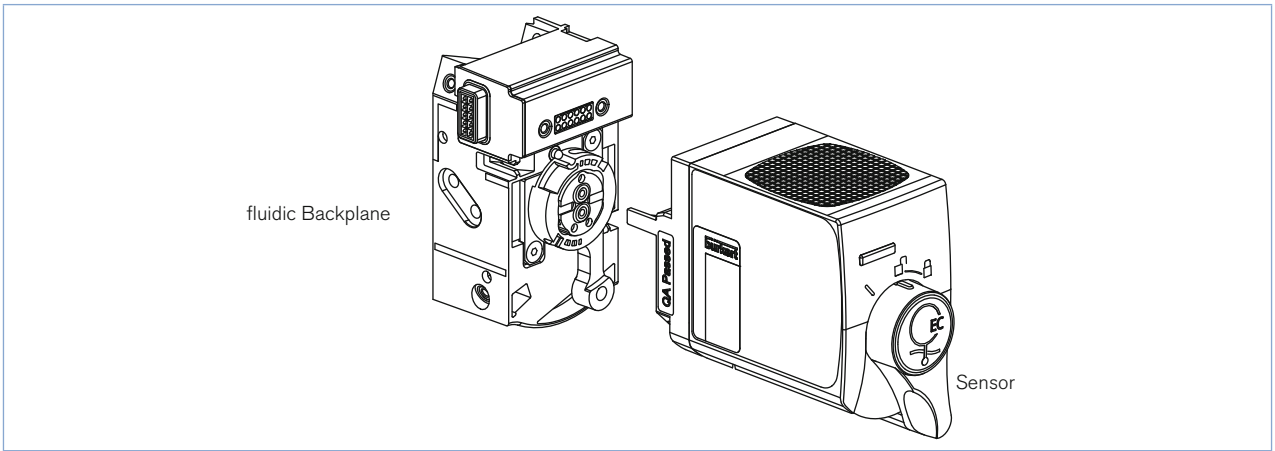

DTS 1000220809 EN Version: H Status: RL (released | freigegeben | validé) printed: 22.09.2017

Dimensions [mm]

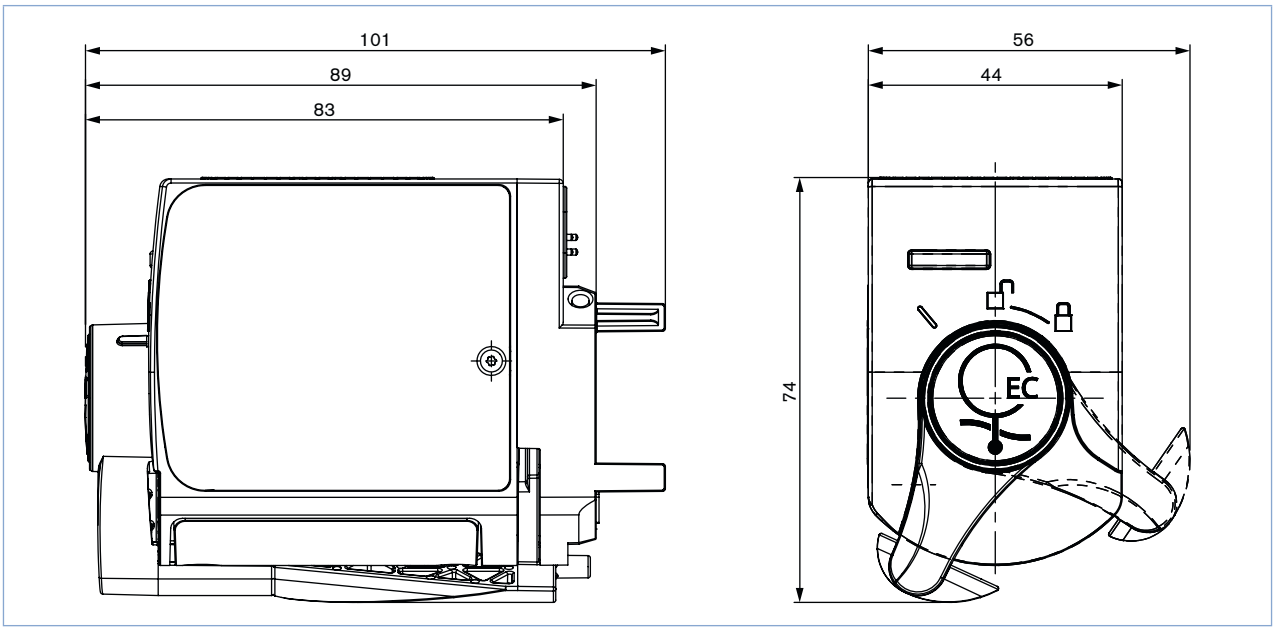

Ordering information and chart - Conductivity sensor cube

The conductivity sensor cube must be operated within a system.
Please refer to the order information for Online Analysis System Type 8905 More info.
or contact your Bürkert representative.

Description	Item no.
Conductivity sensor cube	567 632

Ordering chart - accessories and spare parts

Description	Item no.
Calibration solution, 300 ml, 100 µS	440 017
Calibration solution, 300 ml, 706 µS	440 018

bus powered by EDIP

To find your nearest Bürkert facility, click on the orange box → www.burkert.com

In case of special application conditions, please consult for advice.

Subject to alteration.

1611/6_EU-en_00895265

DTS 1000220809 EN Version: H Status: RL (released | freigegeben | validé) printed: 22.09.2017